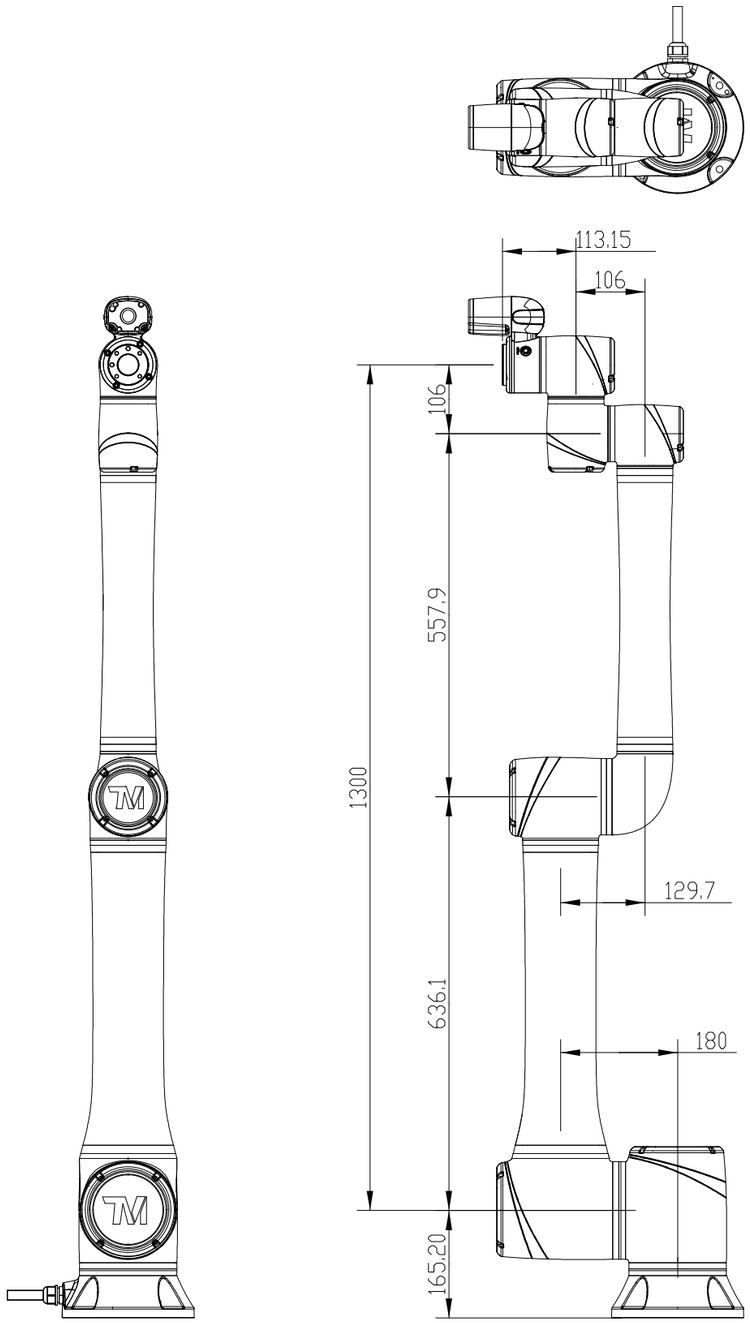

TECHMAN ROBOT

Unspecified Tol's ±mm UNIT:mm

Over	To	Fine	Medium	Coarse
0	6	0.05	0.1	0.2
6	30	0.1	0.2	0.5
30	120	0.15	0.3	0.8
120	400	0.2	0.5	1.2
400	1000	0.3	0.8	2.0
ANGLE		0.5°	1°	2°

SIZE A3

SCALE 1:10

SHEET 1 OF 1

TITLE TM20 OUTLINE HW3.2

PART NO.

REV

MATERIAL

FILE NAME

DRAWN	DESIGN	CHECK	APPROVE